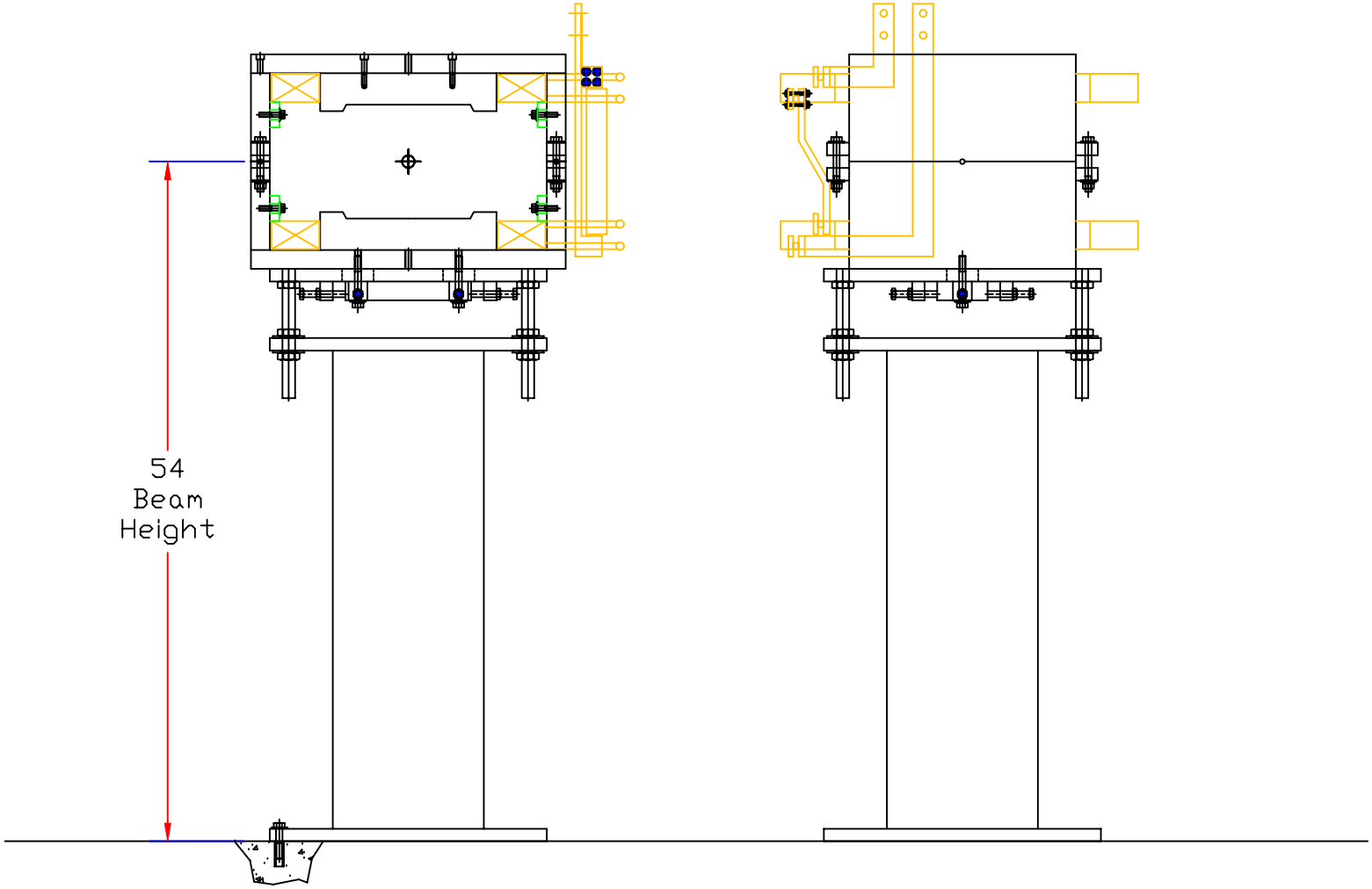
54
Beam
Height